Ambachtstraat 3, 4231 DP Meerkerk
Tel.: +31 183 74 52 10
Email: info@engel-trucks.com

Scania HL 6x2 FULL STEEL SUSPENSION BULK KIPPER (MANUAL GEARBOX / FULL STEEL SUSPENSION / 10 TIRES / 2x P.T.O. / LIFT-AXLE / ETC.)

ALGEMENE INFORMATIE

ID	SN 60911466
Bouwjaar	1992
Tellerstand	129.500 km
Opbouw	Kipper
Emissieklasse	2

TECHNISCHE INFORMATIE

Datum eerste toelating	14-10-1992
Brandstof	Diesel
Transmissie	Handgeschakeld
Voertuigidentificatienummer	XLERH6X2Z04321466
Asconfiguratie	6x2
Ledig gewicht	11.700 kg
Laadgewicht	15.800 kg
Max. gewicht	27.500 kg
Aantal cilinders	6
Vermogen in kW	265
Vermogen in pk	360
Wielbasis	460

Scania R113-360 HL 6x2 FULL STEEL SUSPENSION BULK...

Referentienummer: SN 60911466

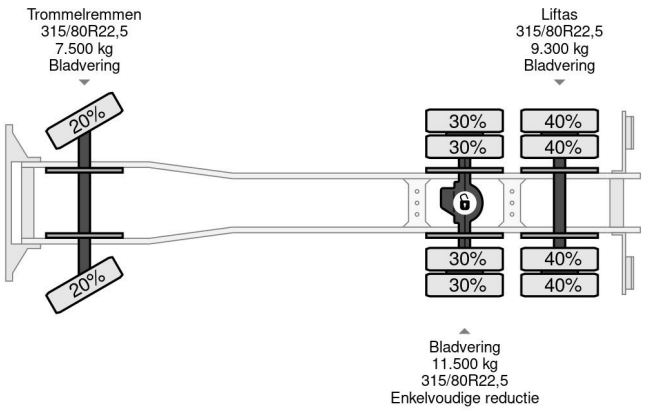

ACCESSOIRES

• 10 Versnellingen handgeschakeld • 40mm. Vangmuil • 400 Liter brandstoftank • ABS • Aftakas (PTO) • BLADGEVEERD • Differentieelblokkering • Hydraulic set • Lift-as • Luxe chauffeurstoel • PTO • PTO • Radio/CD speler • Snelheidsbegrenzer • Sperdifferentieel • Spiegelverwarming • TROMMEL REMMEN • Vangmuil • Verwarmde buitenspiegels • Zonneklep • Zwaailicht

BESCHRIJVING

NICE, CLEAN & GOOD WORKING CONDITION, SCANIA R113-360HL 6x2 BULK KIPPER WITH BLOWER, FULL STEEL SUSPENSION, 10 TIRES & MANUAL GEARBOX!!
360HP, EURO 2, 6 CILINDER ENGINE (MECHANICAL PUMP & INJECTORS)!!
10 GEARS MANUAL GEARBOX!!
FULL STEEL SUSPENSION!!
10 TIRES!!
2x P.T.O.!!
SUNVISOR!!
ETC.!!

OVA ALUMNIUM BILK KIPPER; LENGTH x WIDE x HIGH: Ca. 7.10 x 2.45 x 2.15 M. (Ca. 38 M3)!!
BLOWER!!
BACK DOORS!!
4 ADJUSTABLE COMPARTMENTS!!

TRUCK IS IN NICE AND GOOD WORKING / DRIVING CONDITION, READY FOR THE JOB!!

MORE SCANIA 4x2 / 6x2 / 6x4 / 8x4 (CONSTRUCTION) TRUCKS IN STOCK FOR SALE!! (>75 TRUCKS/TRAILERS IN STOCK)!!

PLEASE CHECK OUR WEBSITE; WWW.ENGEL-TRUCKS.COM

SHIPMENT, STACKING, TRANSPORT OR LOADING?, NO PROBLEM FOR US!, WE ARE AN " ONE STOP SHOP " COMPANY!!

YOU CAN CHECK ALSO OUR COMPANY MOVIE ON YOUTUBE FOR THE FIRST IMPRESSION!! (https://drone-pro.nl/project/video-engel-trucks-bv-2017/)

ENGEL TRUCKS; " YOUR GLOBAL TRADING PARTNER "

Ambachtstraat 3, 4231 DP Meerkerk
Tel.: +31 183 74 52 10
Email: info@engel-trucks.com