Ambachtstraat 3, 4231 DP Meerkerk
Tel.: +31 183 74 52 10
Email: info@engel-trucks.com

Mercedes-Benz D WITH TENT BOX (MANUAL GEARBOX / FULL STEEL SUSPENSION / LOADING PLATFORM / ALUMINIUM SIDE BORDS)

INFORMATIONS GÉNÉRALES

ID	SN 60920227
Année de construction	1980
Kilométrage	282.000 km
Chassis	Bâché
Classe d'émission	1

INFORMATIONS TECHNIQUES

Date première immatriculation	15-05-1980
Carburant	Diesel
Transmission	Transmission manuelle
Configuration des essieux	4x2
Poids à vide	3.780 kg
Poids de la charge	3.710 kg
Poids maximum	7.490 kg
Nombre de cylindres	4
Puissance kw	63
Puissance hp	86
Empattement	360
Longueur	625 cm
Largeur	234 cm
La taille	243 cm

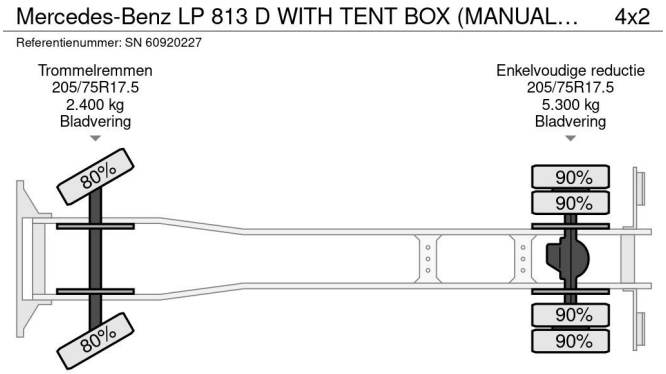

ACCESSOIRES

• LAMES • Radio / lecteur CD

DESCRIPTION

Trappe de chargement: DAUTEL, soupape arrière, 750 kg

NICE & CLEAN CONDITION MERCEDES-BENZ LP813D 4x2 FULL STEEL WITH TENT BOX, ALUMINIUM SIDE BORDS & LOADING PLATFORM!!
130 HP, 4 CILINDER ENGINE, NO ELECTRONICS (MECHANICAL PUMP AND INJECTORS)!!
MANUAL GEARBOX!!
FULL STEEL SUSPENSION!!
ETC.!!

TENT BOX; SIZE; LENGTH x WIDE x HIGH Ca.: 4.55 m. x 2.27 m. x 1.80 m.!!
LOADING PLATFORM!!
70 cm. ALUMINIUM SIDE BORDS!!

TRUCK IS IN NICE, CLEAN AND GOOD DRIVING

CONDITION, READY FOR THE JOB!!

MORE MERCEDES-BENZ 4x2 / 4x4 / 6x4 / 8x4 (CONSTRUCTION) TRUCKS IN STOCK FOR SALE!! (>75 TRUCKS/TRAILERS IN STOCK)!!

PLEASE CHECK OUR WEBSITE; WWW.ENGEL-TRUCKS.COM

SHIPMENT, STACKING, TRANSPORT OR LOADING?, NO PROBLEM FOR US, WE ARE AN " ONE STOP SHOP " COMPANY!!

YOU CAN ALSO CHECK OUR COMPANY MOVIE ON YOUTUBE FOR THE FIRST IMPRESSION!! (https://drone-pro.nl/project/video-engel-trucks-bv-2017/)

ENGEL TRUCKS; " YOUR GLOBAL TRADING PARTNER "

Ambachtstraat 3, 4231 DP Meerkerk
Tel.: +31 183 74 52 10
Email: info@engel-trucks.com