Ambachtstraat 3, 4231 DP Meerkerk
Tel.: +31 183 74 52 10
Email: info@engel-trucks.com

Scania HL 6x2 FULL STEEL SUSPENSION BULK KIPPER (MANUAL GEARBOX / FULL STEEL SUSPENSION / 10 TIRES / 2x P.T.O. / LIFT-AXLE / ETC.)

ALLGEMEINE INFORMATIONEN

ID	SN 60911466
Baujahr	1992
Kilometerstand	129.500 km
Konstruktion	Kipper
Schadstoffklasse	2

TECHNISCHE INFORMATIONEN

Datum der Erstzulassung	14-10-1992
Kraftstoffart	Diesel
Getriebe	Schaltgetriebe
Fahrzeug-Identifizierungsnummer	XLERH6X2Z04321466
Radformel	6x2
Gewicht	11.700 kg
Nutzlast	15.800 kg
Bruttogewicht	27.500 kg
Zylinderzahl	6
Leistung in kW	265
Leistung in PS	360
Radstand	460

Scania R113-360 HL 6x2 FULL STEEL SUSPENSION BULK...

Referentienummer: SN 60911466

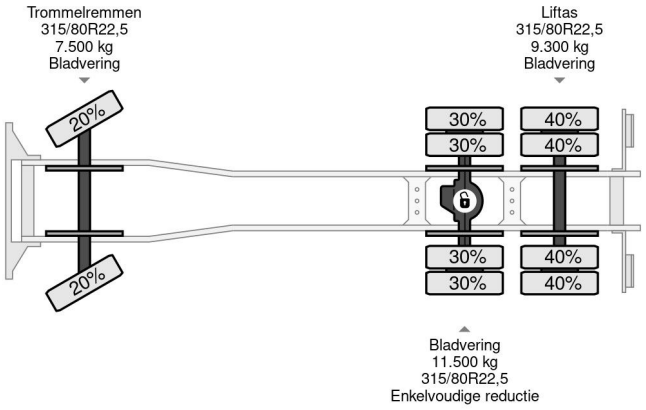

ZUBEHÖR

• 10 Gange Handschaltung • 400 Liter Dieseltank • Antiblockiersystem • Beheizbare Spiegel • BLATT GEFEDERT • Comfortsitze Fahrer • Differentialsperre • Differentialsperre • Geschwindigkeitsbegrenzer • Hydraulic Anlage • Lift Achse • Radio/CD-Spieler • Rundumleuchte • Sonnenschutzklappe • Zapfwelle (PTO) • Zapfwelle (PTO) • Zugmaul

BESCHREIBUNG

NICE, CLEAN & GOOD WORKING CONDITION, SCANIA R113-360HL 6x2 BULK KIPPER WITH BLOWER, FULL STEEL SUSPENSION, 10 TIRES & MANUAL GEARBOX!!
360HP, EURO 2, 6 CILINDER ENGINE (MECHANICAL PUMP & INJECTORS)!!
10 GEARS MANUAL GEARBOX!!
FULL STEEL SUSPENSION!!
10 TIRES!!
2x P.T.O.!!
SUNVISOR!!
ETC.!!

OVA ALUMNIUM BILK KIPPER; LENGTH x WIDE x HIGH: Ca. 7.10 x 2.45 x 2.15 M. (Ca. 38 M3)!!
BLOWER!!
BACK DOORS!!
4 ADJUSTABLE COMPARTMENTS!!

TRUCK IS IN NICE AND GOOD WORKING / DRIVING CONDITION, READY FOR THE JOB!!

MORE SCANIA 4x2 / 6x2 / 6x4 / 8x4 (CONSTRUCTION) TRUCKS IN STOCK FOR SALE!! (>75 TRUCKS/TRAILERS IN STOCK)!!

PLEASE CHECK OUR WEBSITE; WWW.ENGEL-TRUCKS.COM

SHIPMENT, STACKING, TRANSPORT OR LOADING?, NO PROBLEM FOR US!, WE ARE AN " ONE STOP SHOP " COMPANY!!

YOU CAN CHECK ALSO OUR COMPANY MOVIE ON YOUTUBE FOR THE FIRST IMPRESSION!! (https://drone-pro.nl/project/video-engel-trucks-bv-2017/)

ENGEL TRUCKS; " YOUR GLOBAL TRADING PARTNER "

Ambachtstraat 3, 4231 DP Meerkerk
Tel.: +31 183 74 52 10
Email: info@engel-trucks.com