Ambachtstraat 3, 4231 DP Meerkerk
Tel.: +31 183 74 52 10
Email: info@engel-trucks.com

Mercedes-Benz D WITH TENT BOX (MANUAL GEARBOX / FULL STEEL SUSPENSION / LOADING PLATFORM / ALUMINIUM SIDE BORDS)

ALLGEMEINE INFORMATIONEN

ID	SN 60920227
Baujahr	1980
Kilometerstand	282.000 km
Konstruktion	Plane
Schadstoffklasse	1

TECHNISCHE INFORMATIONEN

Datum der Erstzulassung	15-05-1980
Kraftstoffart	Diesel
Getriebe	Schaltgetriebe
Radformel	4x2
Gewicht	3.780 kg
Nutzlast	3.710 kg
Bruttogewicht	7.490 kg
Zylinderzahl	4
Leistung in kW	63
Leistung in PS	86
Radstand	360
Länge	625 cm
Breite	234 cm
Höhe	243 cm

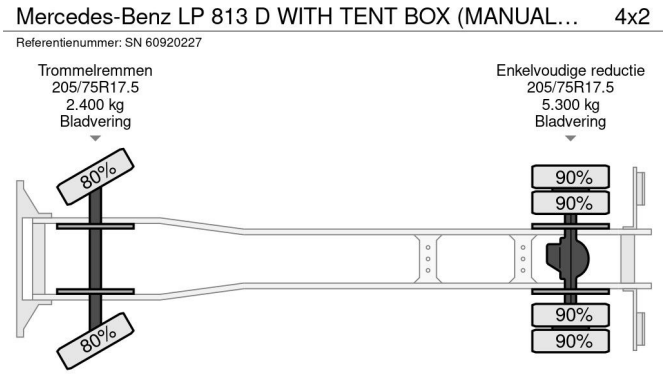

ZUBEHÖR

• 5 Gange Handschaltung Getriebe • BLATT GEFEDERT • Radio/CD-Spieler

BESCHREIBUNG

Ladebordwand: DAUTEL, Heckklappe, 750 kg

NICE & CLEAN CONDITION MERCEDES-BENZ LP813D 4x2 FULL STEEL WITH TENT BOX, ALUMINIUM SIDE BORDS & LOADING PLATFORM!!
130 HP, 4 CILINDER ENGINE, NO ELECTRONICS (MECHANICAL PUMP AND INJECTORS)!!
MANUAL GEARBOX!!
FULL STEEL SUSPENSION!!
ETC.!!

TENT BOX; SIZE; LENGTH x WIDE x HIGH Ca.: 4.55 m. x 2.27 m. x 1.80 m.!!
LOADING PLATFORM!!
70 cm. ALUMINIUM SIDE BORDS!!

TRUCK IS IN NICE, CLEAN AND GOOD DRIVING

CONDITION, READY FOR THE JOB!!

MORE MERCEDES-BENZ 4x2 / 4x4 / 6x4 / 8x4 (CONSTRUCTION) TRUCKS IN STOCK FOR SALE!! (>75 TRUCKS/TRAILERS IN STOCK)!!

PLEASE CHECK OUR WEBSITE; WWW.ENGEL-TRUCKS.COM

SHIPMENT, STACKING, TRANSPORT OR LOADING?, NO PROBLEM FOR US, WE ARE AN " ONE STOP SHOP " COMPANY!!

YOU CAN ALSO CHECK OUR COMPANY MOVIE ON YOUTUBE FOR THE FIRST IMPRESSION!! (https://drone-pro.nl/project/video-engel-trucks-bv-2017/)

ENGEL TRUCKS; " YOUR GLOBAL TRADING PARTNER "

Ambachtstraat 3, 4231 DP Meerkerk
Tel.: +31 183 74 52 10
Email: info@engel-trucks.com